30mm Turning solar panel mount - Mounting instructions

Art. 10608

Boatsystem Group AB, Traneredsvägen 112, 426 53 Västra Frölunda, Sweden
Phone: +46 (0)31-69 03 80, www.boatsystemgroup.com, info@boatsystemgroup.com

A

M8x60	M8x35	Locknut M8	M8	Ø30 mm	25 mm	Ø40 mm	Tube Ø25x350	End plug Ø25
x1	**x1**	**x2**	**x2**	**x1** (pair)	**x2** (pair)	**x1** (pair)	**x1**	**x1**
1	2	3	4	5	6	7	8	9

C

M8x22	M8	Knob M8x28	Ø30 mm	25 mm	Strutprofile 650 mm	End plug Ø25	Tube Ø25x600
x2	**x4**	**x2**	**x2**	**x2** (pair)	**x2**	**x2**	**x1**
13	14	15	16	6	17	9	18

B

M8x60	M8x35	Locknut M8	Knob M8	M8	Ø30 mm	25 mm	Ø40 mm	Spacer	Tube Ø30x1900
x1	**x1**	**x2**	**x1**	**x2**	**x1** (pair)	**x1** (pair)	**x1** (pair)	**x1**	**x1**
1	2	3	10	4	5	6	7	11	12

D

M8x25	Alu-half
x1	**x1** (pair)
19	20

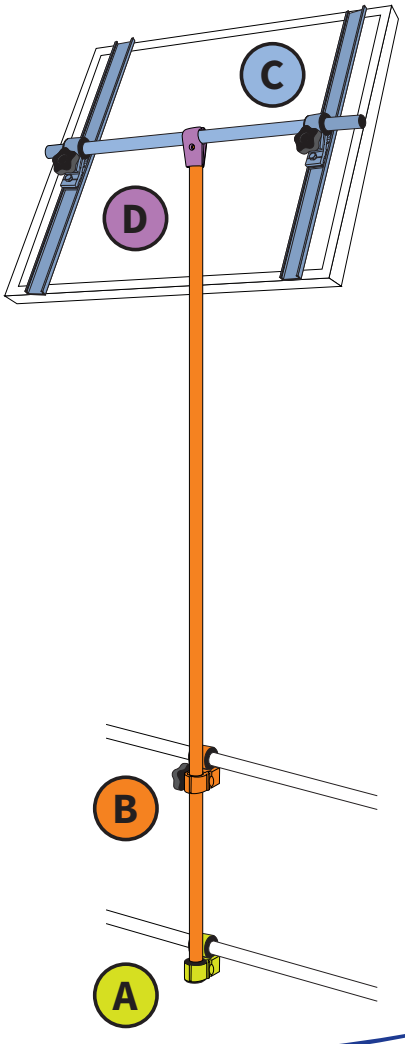

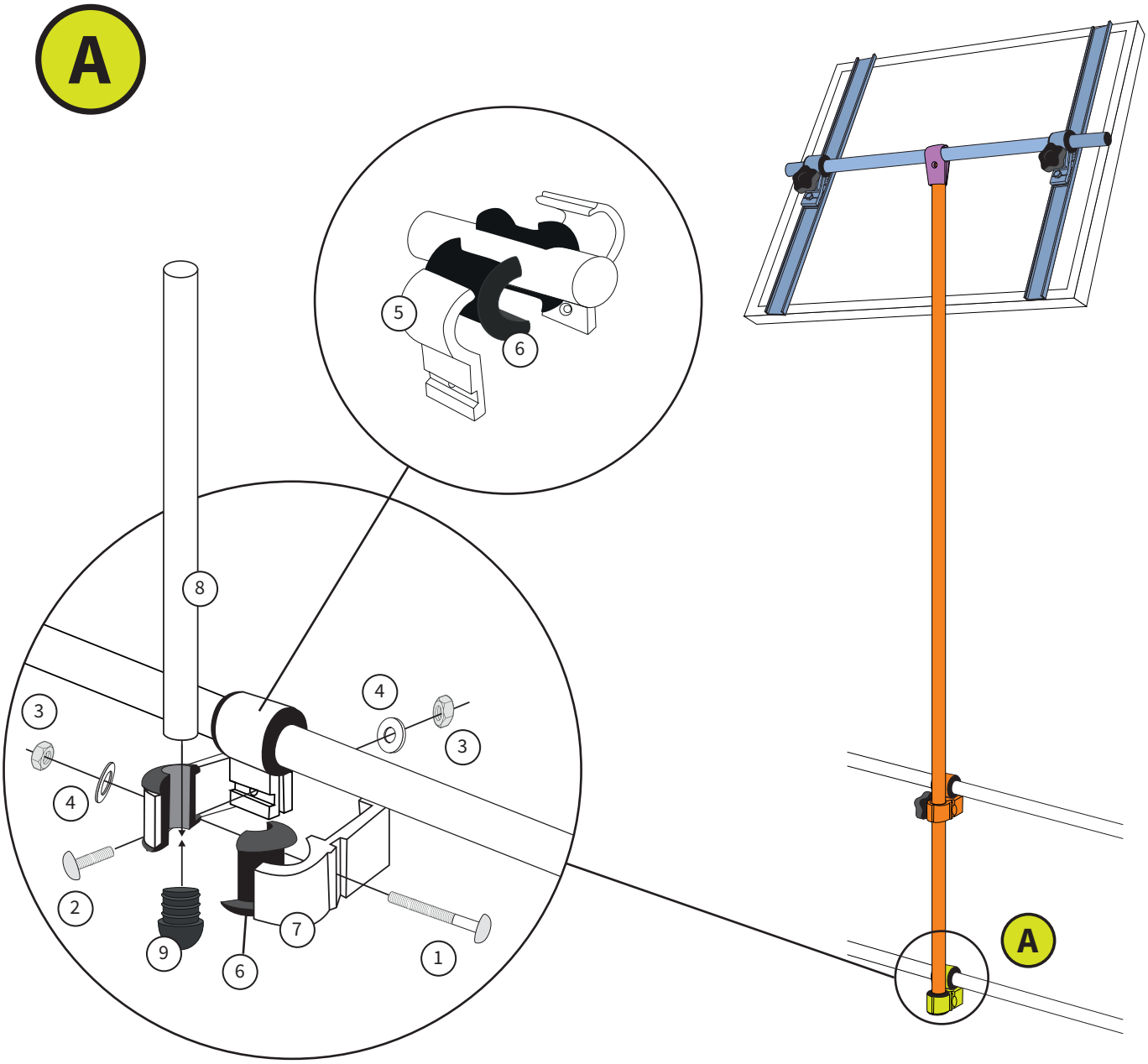
A
5
6
8
4
3
3
4
2
9
6
7
1
A

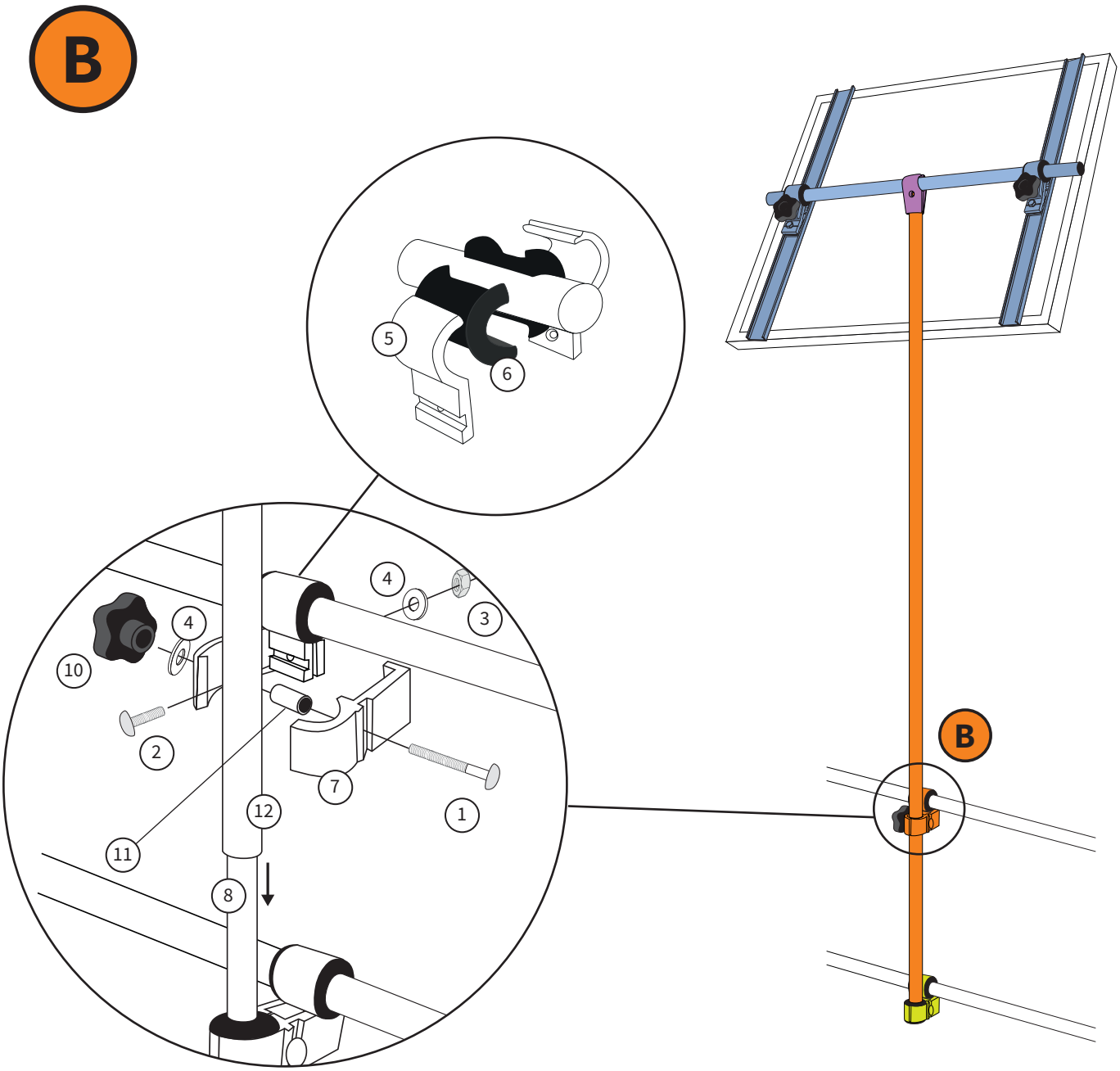
B
5
6
4
3
4
10
2
7
1
12
11
8
B

C



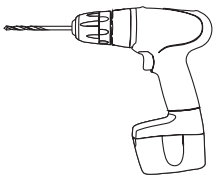

Screws not included/
Skruvar ingår inte

Cut if too long/
Kapa vid behov

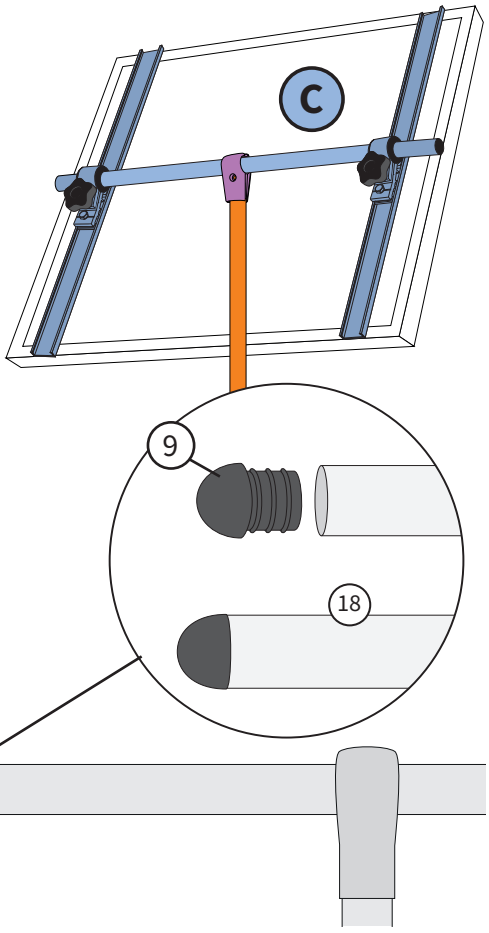

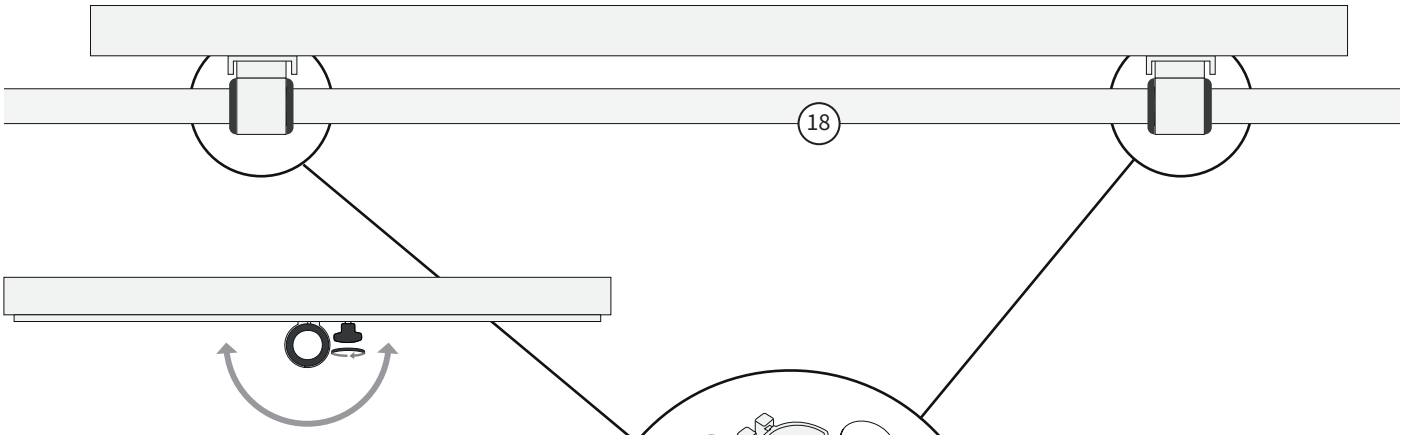

The knob locks rotation around the tube /
Ratten låser vridning runt röret

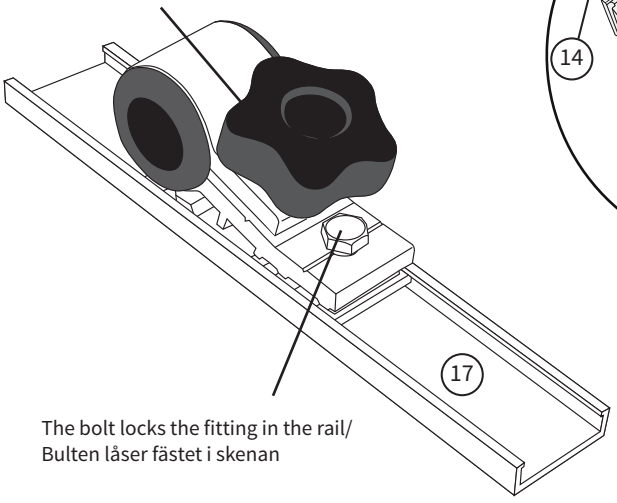

The bolt locks the fitting in the rail/
Bulten låser fästet i skenan

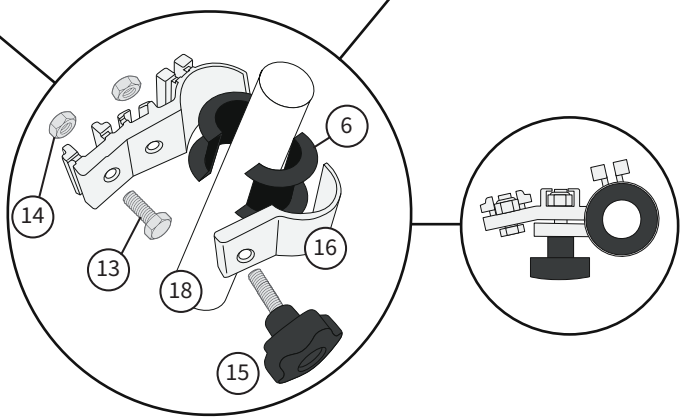

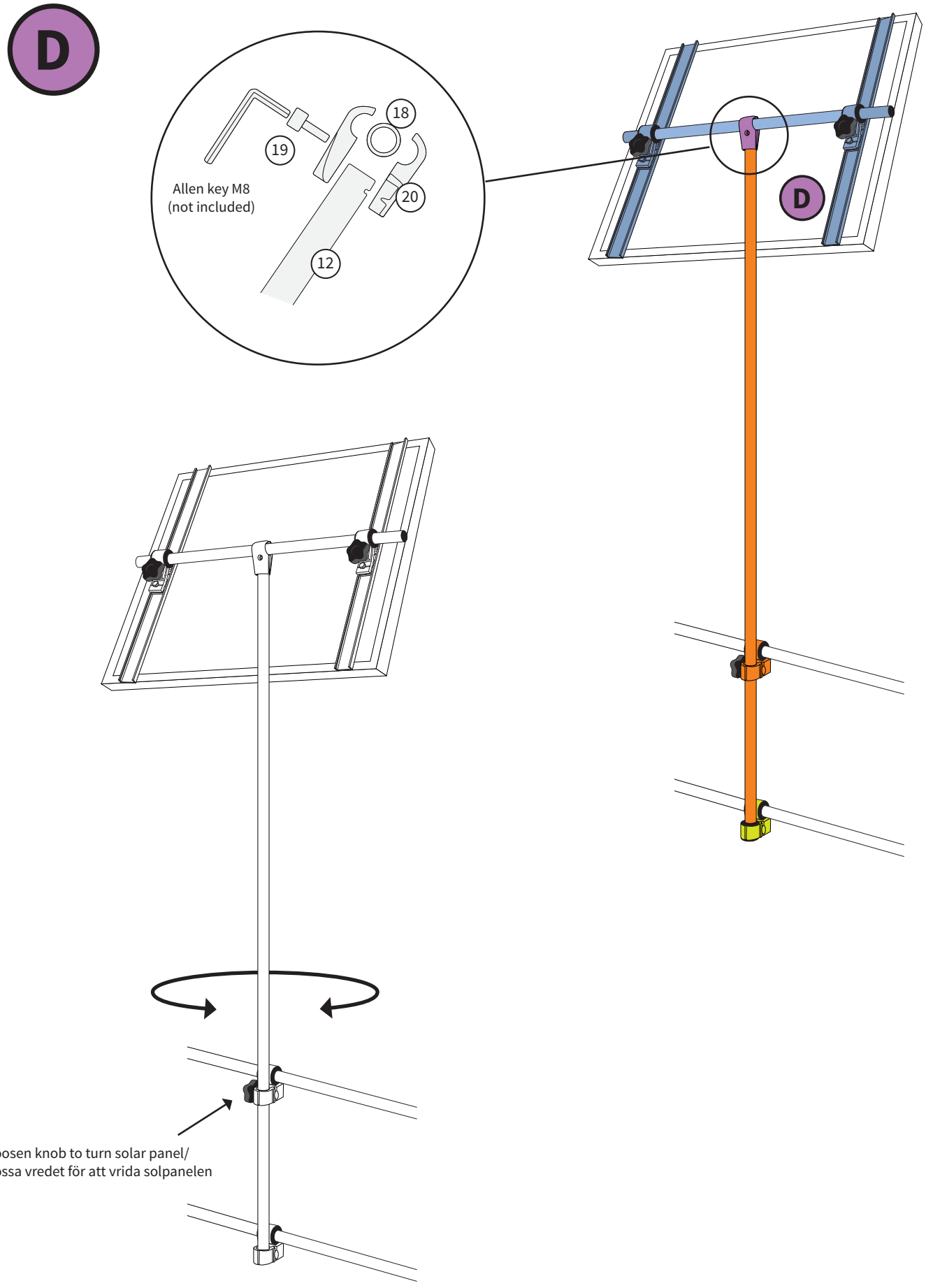
D
18
19
20
12
Allen key M8
(not included)
D
Loosen knob to turn solar panel/
Lossa vredet för att vrida solpanelen